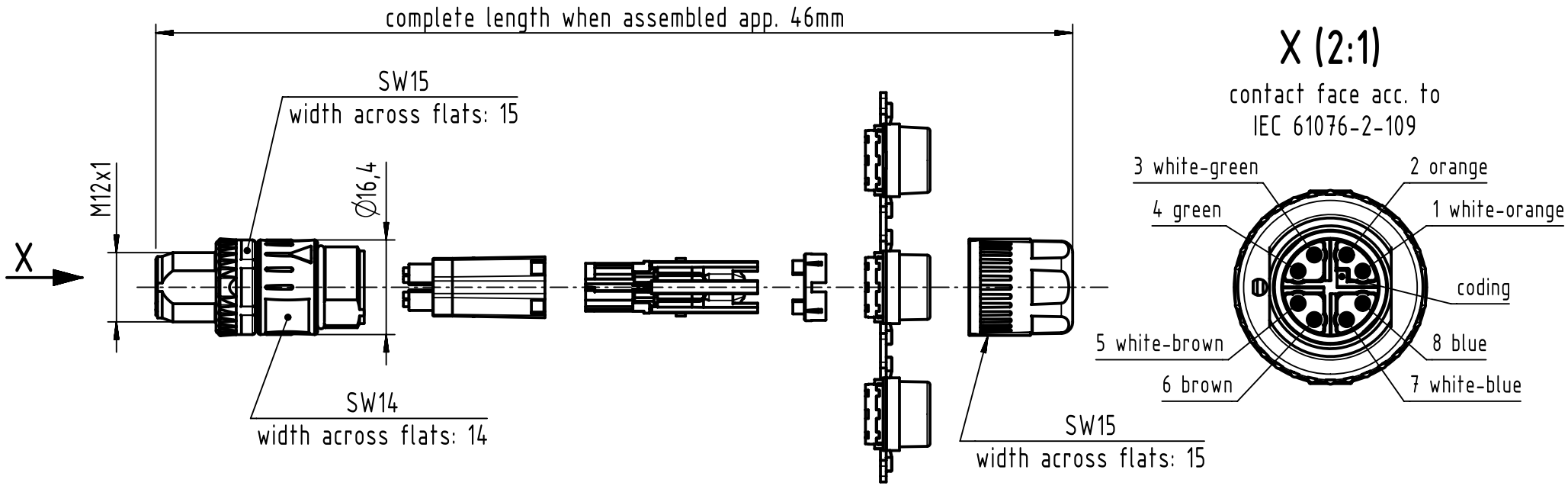

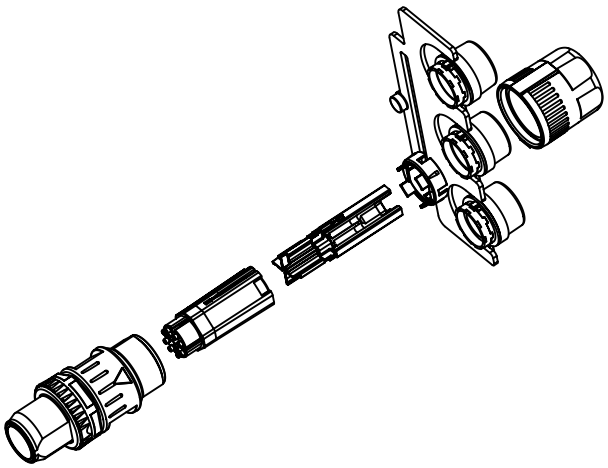

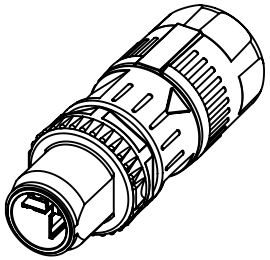

order contacts separately

cable Ø	wire gauge	part-no.
5,7-8,8mm	AWG 24-28	21 01 100 9014
	AWG 23-26	21 01 100 9019

All Dimensions in mm
Original Size DIN A4

Scale 1:1 | Free size tol. | Ref. | Sub.

All rights reserved

Department EC PD - RO

HARTING Electronics GmbH
D-32339 Espelkamp

Created by	Inspected by	Standardisation	Date	State
POPESCUD	TAMAS	HOFFMANN	2017-10-02	Final Release

Title: har-speed M12 crimp Slim 8-pole male

Doc-Key / ECM-Nr.: 100520048/UGD/000/D 500000124707

Type: TB | Number: 21038811805 | Rev.: D | Page: 1/1

A4