REVISIONS				
REV. SYM.	E.C.O. NUMBER	DESCRIPTION	BY DATE	APP'D DATE
1		ORIGINAL RELEASE	LE 3-26-05	RRR 8-87
2		ADDED DIM "C"	SAL 3-29-05	RRR 3-29-05

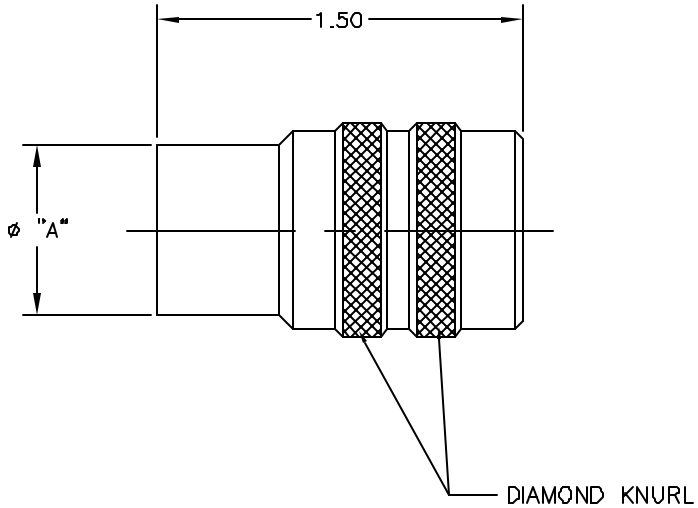

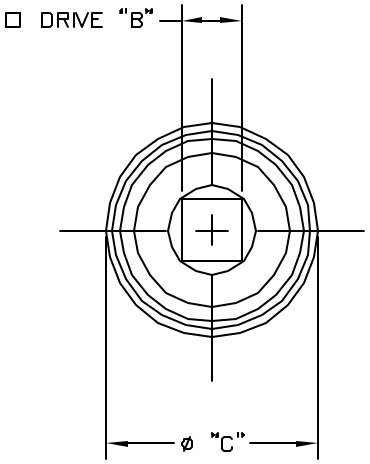

PART NO.	DIM. "A"	DIM. "B"	DIM. "C"	KEYING POSITIONS
CM389L-25	1.585	3/8	1.750	ALL
CM389L-23	1.460	3/8	1.625	ALL
CM389L-21	1.335	3/8	1.500	ALL
CM389L-19	1.210	3/8	1.375	ALL
CM389L-17	1.103	1/4	1.250	ALL
CM389L-15	.978	1/4	1.125	ALL
CM389L-13	.854	1/4	1.000	ALL
CM389L-11	.705	1/4	.875	ALL
CM389L-9	.573	1/4	.812	ALL

UNCONTROLLED DOCUMENT WILL NOT BE UPDATED

1. FOR MIL-C-38999 SERIES 1 PLUGS.

NOTES:

RESTRICTED & CONFIDENTIAL

CONFIDENTIAL PROPERTY OF DANIELS MANUFACTURING CORP. NOT TO BE DISCLOSED TO OTHERS, REPRODUCED OR USED FOR ANY OTHER PURPOSE, EXCEPT AS AUTHORIZED IN WRITING BY DANIELS MANUFACTURING. MUST BE RETURNED TO DANIELS MANUFACTURING CORP. ON COMPLETION OF ORDER OR OTHER PURPOSE FOR WHICH LENT.

DO NOT SCALE DRAWING

MATERIAL

HEAT TREAT

FINISH

ITEM	PART NO.	QTY.	DESCRIPTION/REMARKS

DRN. LE	DATE 8-24-87	
CHK'D. JS	DATE 8-24-87	
APP'D. TR	DATE 8-31-87	
APP'D. WJP	DATE 9-1-87	

NOTE: THIS DRAWING IS AN OUTLINE DRAWING OF THE RESPECTIVE DMC PART NUMBER INDICATED. ACTUAL DMC PART NUMBER IS DRAWING NUMBER WITHOUT THE "-ENV" SUFFIX.

DMC DANIELS MANUFACTURING CORP. ORLANDO, FLORIDA CAGE 11851

TITLE: ADAPTOR TOOL SET (METAL) ENVELOPE DRAWING

WHERE USED:

SIZE	SCALE	CAD P/N	SHEET 1 OF 1
B	NTS	CM-S-389L-ENV	

POSTING

DWG. NO.	REV.
CM-S-389L-ENV	2