REVISIONS				
REV. SYM.	E.C.O. NUMBER	DESCRIPTION	BY DATE	APP'D DATE
1		ORIGINAL RELEASE	JWJ 3/18/04	RRR 3/15/04

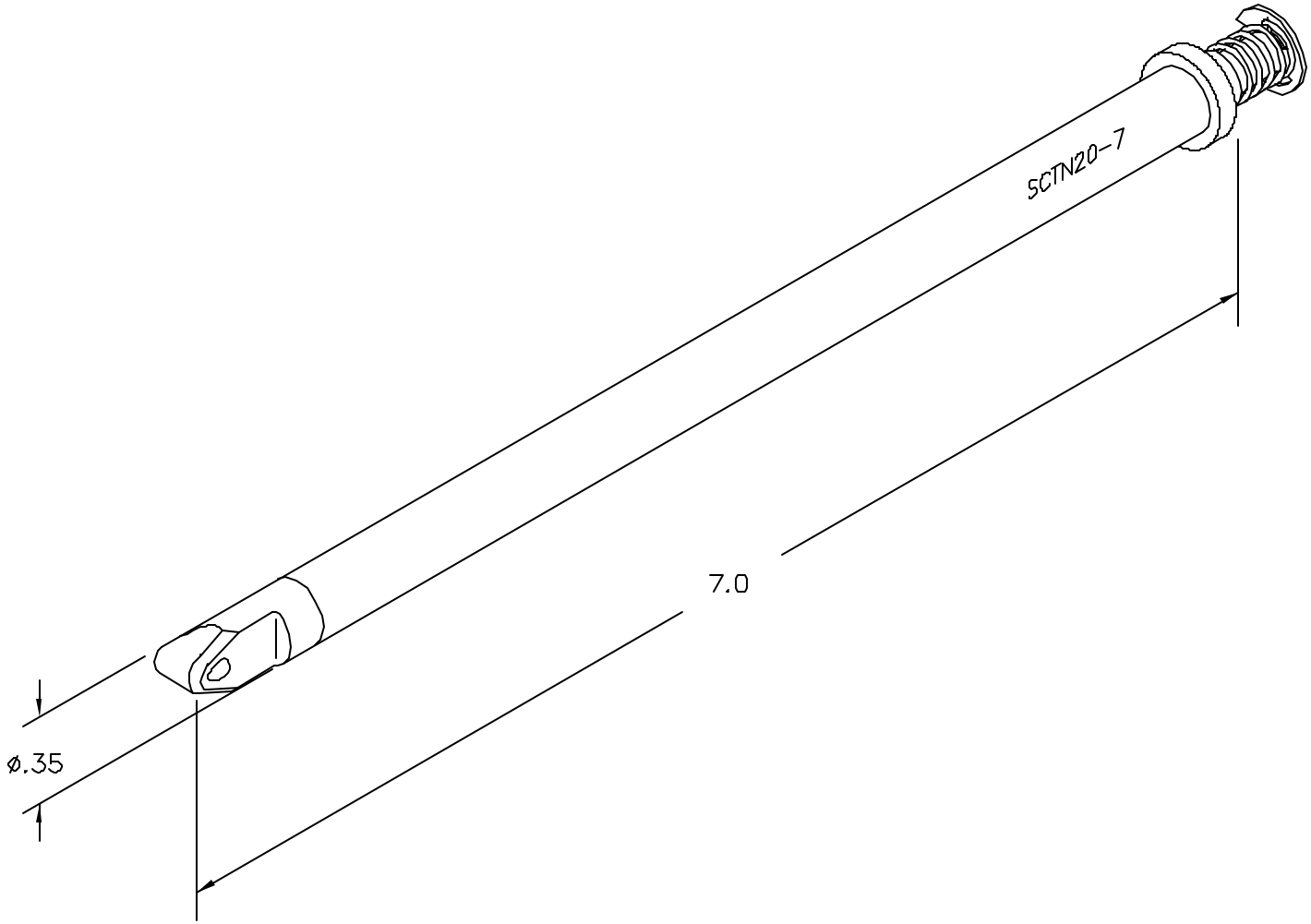

UNCONTROLLED DOCUMENT
WILL NOT BE UPDATED

MATERIAL	ITEM	PART NO.	QTY.	DESCRIPTION/REMARKS

DRN. J. JOYCE	DATE 3/18/04	DANIELS MANUFACTURING CORP. ORLANDO, FLORIDA CAGE 11851
CHK'D. RRR	DATE 3/15/04	
APP'D.	DATE	TITLE NOSE ASSEMBLY, 7", ø.020 SAFE-T-CABLE ENVELOPE DRAWING
APPD.	DATE	WHERE USED
HEAT TREAT		
FINISH		

NOTE:
THIS DRAWING IS AN OUTLINE DRAWING OF THE RESPECTIVE DMC PART NUMBER INDICATED. ACTUAL DWG PART NUMBER IS DRAWING NUMBER WITHOUT THE "-ENV" SUFFIX.

SIZE	SCALE	CAD P/N	SHEET	OF
C	NTS	SCTN20-7-ENV	1	1

POSTING

DWG. NO.	REV.
SCTN20-7-ENV	1