Coaxial

Directional Coupler

ZFDC-15-6+

50Ω 0.03 to 35 MHz

Generic photo used for illustration purposes only

CASE STYLE: K18

Connectors	Model
BNC	ZFDC-15-6+
SMA	ZFDC-15-6-S+
N-TYPE	ZFDC-15-6-N+
BRACKET (OPTION"B")	

+RoHS Compliant

The +Suffix identifies RoHS Compliance. See our web site for RoHS Compliance methodologies and qualifications

Maximum Ratings

Operating Temperature	-55°C to 100°C
Storage Temperature	-55°C to 100°C

Permanent damage may occur if any of these limits are exceeded.

Coaxial Connections

INPUT	1
OUTPUT	2
COUPLED	3

Features

- excellent directivity, 35 dB typ.
- excellent mainline loss, 0.2 dB typ.
- excellent VSWR, 1.15:1 typ.
- rugged shielded case

Applications

- hf communications
- ham radio
- instrumentation

Outline Drawing

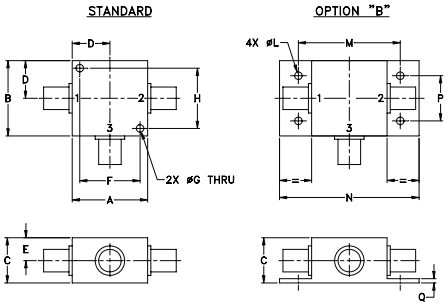

Outline Dimensions (inch / mm)

A	B	C	D	E	F	G	H
1.25	1.25	.75	.63	.38	1.00	.125	1.000
31.75	31.75	19.05	16.00	9.65	25.40	3.18	25.40

J	K	L	M	N	P	Q	wt
--	--	.125	1.688	2.18	.75	.07	grams
--	--	3.18	42.88	55.37	19.05	1.78	70.0

Directional Coupler Electrical Specifications

FREQ. RANGE (MHz)	COUPLING (dB)		MAINLINE LOSS[1] (dB)						DIRECTIVITY (dB)						VSWR (:1)	POWER INPUT (W)	
			L		M		U		L		M		U			L	MU
f_L-f_U	Nom.	Flatness	Typ.	Max.	Typ.	Max.	Typ.	Max.	Typ.	Min.	Typ.	Min.	Typ.	Min.	Typ.	Max.	Max.
.03-35	15±0.5	±0.5	0.3	0.6	0.2	0.4	0.3	0.6	38	30	35	25	28	20	1.15	2.0	4.0

L = low range [f_L to 10 f_L] M = mid range [10 f_L to f_U/2] U= upper range [f_U/2 to f_U]

1. Mainline loss includes theoretical power loss at coupled port.

Typical Performance Data

Frequency (MHz)	Mainline Loss (dB) In-Out	Coupling (dB) In-Cpl	Directivity (dB)	Return Loss (dB) In	Return Loss (dB) Out	Return Loss (dB) Cpl
0.03	0.21	15.35	56.83	31.97	32.85	32.50
0.30	0.16	14.96	55.85	34.78	36.00	35.85
3.00	0.16	14.97	50.17	34.09	36.81	34.28
7.00	0.18	14.98	43.63	33.51	37.39	29.46
11.00	0.18	15.00	39.48	33.10	37.65	25.87
16.00	0.19	15.01	35.75	32.66	37.71	22.70
21.00	0.19	15.03	32.87	32.29	37.59	20.33
26.00	0.20	15.07	30.17	31.89	37.40	18.46
31.00	0.21	15.11	27.85	31.50	37.07	16.91
35.00	0.22	15.15	26.10	31.11	36.76	15.83

ZFDC-15-6-S+
MAINLINE LOSS

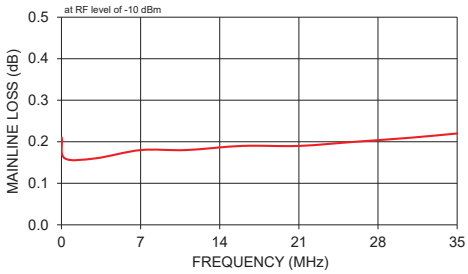

ZFDC-15-6-S+
COUPLING & DIRECTIVITY

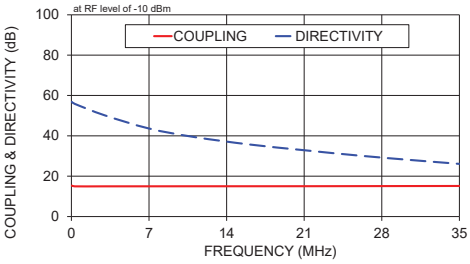

ZFDC-15-6-S+
RETURN LOSS

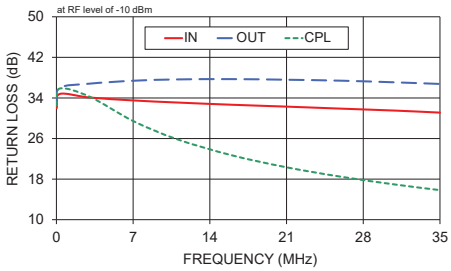

Electrical Schematic

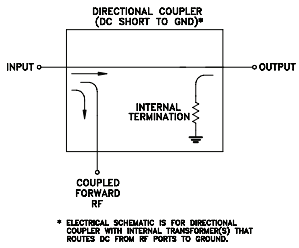

Notes

A. Performance and quality attributes and conditions not expressly stated in this specification document are intended to be excluded and do not form a part of this specification document.

B. Electrical specifications and performance data contained in this specification document are based on Mini-Circuit's applicable established test performance criteria and measurement instructions.

C. The parts covered by this specification document are subject to Mini-Circuits standard limited warranty and terms and conditions (collectively, "Standard Terms"); Purchasers of this part are entitled to the rights and benefits contained therein. For a full statement of the Standard Terms and the exclusive rights and remedies thereunder, please visit Mini-Circuits' website at www.minicircuits.com/MCLStore/terms.jsp

Mini-Circuits®

www.minicircuits.com P.O. Box 350166, Brooklyn, NY 11235-0003 (718) 934-4500 sales@minicircuits.com