REVISIONS						
REV	ECO NO.	DESCRIPTION	BY	DATE	APP'D BY	DATE
1		ORIGINAL RELEASE	AAM	12/20/1999	RRR	12/20/1999
2	23573	UPDATED & REDRAWN	TonyD	3/17/2015		
3	25000	DATAPLATE UPDATED	TonyD	5/5/2020		

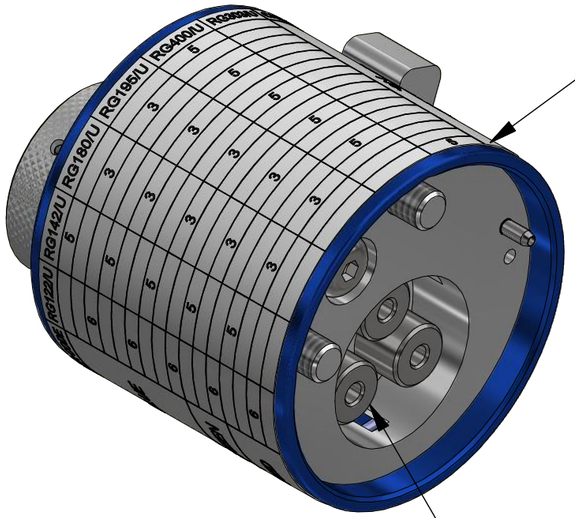

DATAPLATE

3X POSITIONER INSERTS

M39012	COLOR CODE	RG122/U	RG142/U	RG180/U	RG195/U	RG400/U	RG303/U	CABLE
/16-0503; /26-0503	BLUE		5			5		SELECTOR No.
/16-0502; /26-0502				3	3			
/16-0501; /26-0501		6						
/17-0503; /27-0503			5			5		
/17-0502; /27-0502				3	3			
/17-0501; /27-0501		6						
/18-0503; /29-0503			5			5		
/18-0502; /29-0502				3	3			
/18-0501; /29-0501		6						
/20-0503; /30-0503	GREEN		5			5		
/20-0502; /30-0502				3	3			
/20-0501; /30-0501		6						
/19-0503; /28-0503	RED		5			5		
/19-0502; /28-0502				3	3			
/19-0501; /28-0501		6						
/16-0504							5	

UNCONTROLLED DOCUMENT WILL NOT BE UPDATED

DIMENSIONS IN INCHES - UNLESS OTHERWISE SPECIFIED

TURRET LATCH

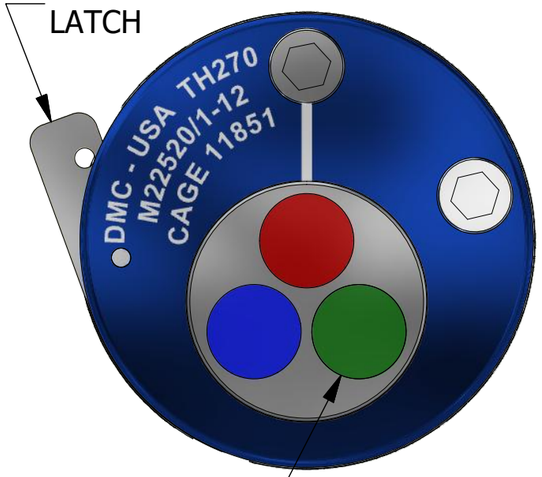

RANDOM ORDER OF ROTATION IS ACCEPTABLE FOR POSITONER INSERTS

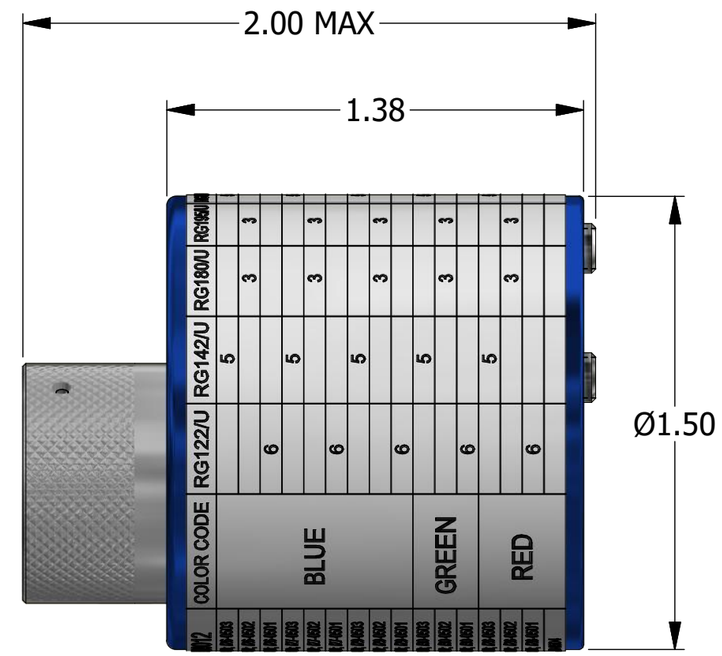

INSERT COLOR	HOLE DIMENSIONS	ADDITIONAL FEATURES
RED	Ø.086 ↧.512	
BLUE	Ø.059 ↧.294	⌴ Ø.086 ↧.273
GREEN	Ø.086 ↧.422	

RESTRICTED & CONFIDENTIAL

CONFIDENTIAL PROPERTY OF DANIELS MANUFACTURING CORP. NOT TO BE DISCLOSED TO OTHERS. REPRODUCTION OR USED FOR ANY OTHER PURPOSE EXCEPT AS AUTHORIZED IN WRITING BY DANIELS MANUFACTURING. MUST BE RETURNED TO DANIELS MANUFACTURING CORP. ON COMPLETION OF ORDER OR PURPOSES FOR WHICH LENT.

CREATED FROM AN INVENTOR MODEL. CHANGES MUST BE REFLECTED IN THE 3D PART

DO NOT SCALE DRAWING

MATERIAL: N/A

HEAT TREAT: N/A

FINISH: N/A

ITEM	PART NO.	QTY.	DESCRIPTION / REMARKS

DRN. A. MOO-YOUNG — DATE 12/20/1999

CHK'D. — DATE

DANIELS MANUFACTURING CORP.
ORLANDO, FLORIDA
CAGE 11851

NOTE:
THIS DRAWING IS AN OUTLINE DRAWING OF THE RESPECTIVE DMC PART NUMBER INDICATED. ACTUAL DMC PART NUMBER IS CAD PART NUMBER WITHOUT THE "-ENV" SUFFIX

TITLE: TURRET HEAD (M22520/1-12) ENVELOPE DRAWING

WHERE USED: AF8

SIZE	SCALE	CAD P/N	SHEET
B	2 : 1	TH270-ENV	1 OF 1
		DWG. NO. TH270	REV. 3